CYLINDRIX COVE

CYLTCOVE
CDM-Tm

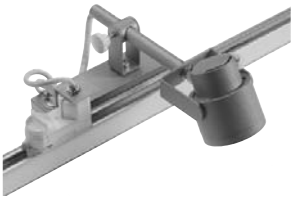

APPLICATION:
Retail and commercial architectural cove accent lighting

CONSTRUCTION:
Die-cast optical head
Extruded aluminum adjustment arm
Formed steel ballast housing

OPTICS:
45° x 45° tilt, 90° x 90° rotation, horizontal sliding capability
Available in a variety of beam spreads featuring Amerlux optics specifically designed for the CDM-Tm Mini MasterColor® lamp
Available in custom tints to tune beam to provide incandescent-like hue

MOUNTING:
For use in architectural coves

LABELING:
cUL listed

PROJECT:

TYPE:

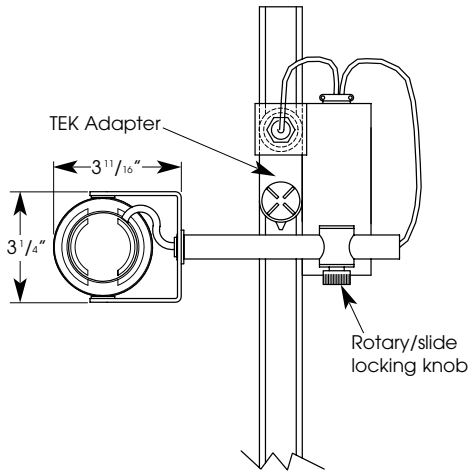

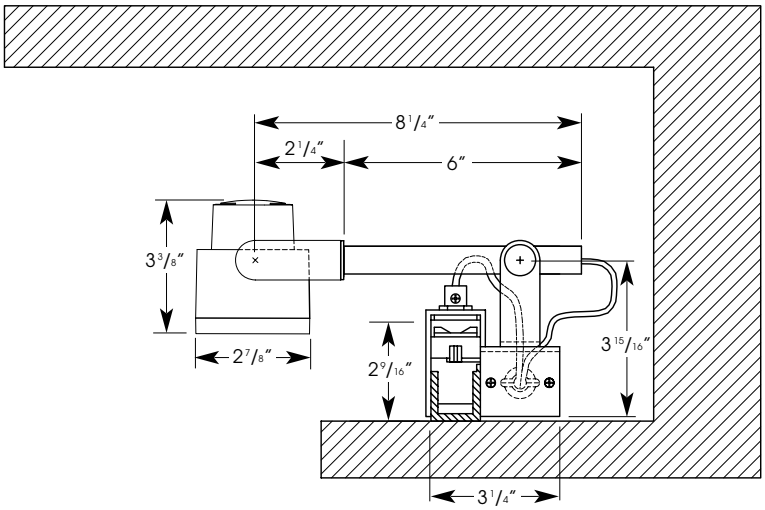

ELECTRICAL

Ballast		Lamping 20w Input watts	20w Amps*	39w Input watts	39w Amps*
Electronic	120v	26	0.23	45	0.40
	277v	26	0.12	45	0.20

*Data is for open circuit current
CDM Tm PGJ5 base metal halide, 20w and 39w

Amerlux reserves the right to change details that do not affect overall function and performance.

ORDERING INFORMATION:

Model	Wattage	Lamp Type	Ballast	Finish	Mounting	Voltage	Beam Spreads	Options/ Accessories
CYLTCOVE	20 39	MM - CDM-Tm Mini MasterColor®	E - electronic	WT - white texture BT - black texture ST - silver texture __ - ____ (other RAL)	TEK - Global 2cir/2neut, 120v HTEK - Global 2cir/2neut, 277v	120 277	CL - spot, 12° NF - narrow flood, 18° FL - flood, 25° WF - wide flood, 40° SL - linear spread lens, 5° x 55°	GOLD - ferric gold optic reflector DB2690 - DB2690 optic reflector HEX - hexcell louver (1/8" x 1/8") SN - snoot, specify lengthand finish, 3/4" standard

Example: CYLTCOVE-20-MM-E-WT-TEK-120-NF

Cat #:

23 daniel road east, fairfield NJ 07004 • T: 973 882 5010 F: 973 882 2605 • www.amerlux.com

amerlux
GLOBAL LIGHTING SOLUTIONS

CYLINDRIX COVE

CYLTCOVE
CDM-Tm

amerlux
GLOBAL LIGHTING SOLUTIONS

TYPE:

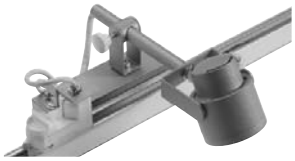

FIXTURE DATA: Test run with standard clear reflector. For gold, multiply by 0.9
For 39w data, multiply by 1.8

Complete photometric data (.ies format) available upon request.

20W CDM Tm MH

Spot (CL) Distribution
LTL # 09798

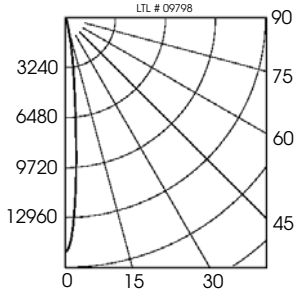

Candelas at Nadir

Deg	Candela
0	16360
5	8464
15	764
25	194
35	115
45	38

Narrow Flood (NF) Distribution
LTL # 09800

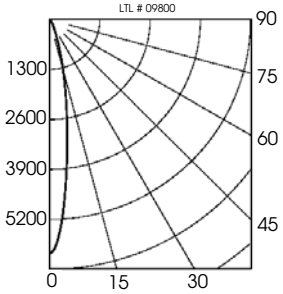

Candelas at Nadir

Deg	Candela
0	6080
5	4562
15	1338
25	335
35	128
45	57

Flood (FL) Distribution
LTL # 09801

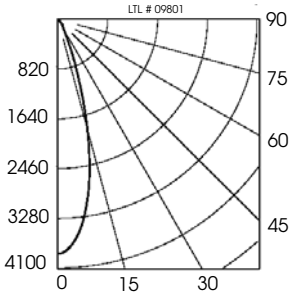

Candelas at Nadir

Deg	Candela
0	3864
5	3593
15	1864
25	390
35	139
45	37

APPLICATION DATA:

Notes and Definitions:
Beam spread is to 50% center beam candlepower (CBCP).
D=Distance to floor or wall.
FC=Footcandles on floor or wall at center beam aiming location.
L=Effective Visual Beam length in feet (50% of maximum footcandle level).
W=Effective Visual Beam width in feet (50% of maximum footcandle level).
CB=Distance across or down to center beam location.

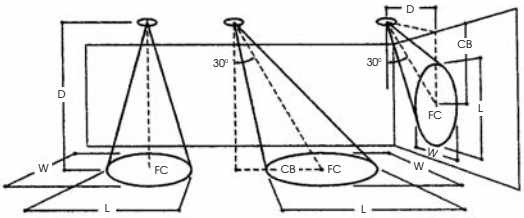

0° Aiming Angle Horizontal Footcandles

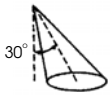

30° Aiming Angle Horizontal Footcandles

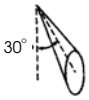

30° Aiming Angle Vertical Footcandles

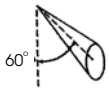

60° Aiming Angle Vertical Footcandles

	D	FC	L	W	D	FC	L	W	CB	D	FC	L	W	CB	D	FC	L	W	CB
SPOT	5.0′	654	1.1	1.1	5.0′	401	1.3	1.2	3.0	3.0′	240	2.1	1.0	4.8	3.0′	1163	0.7	0.6	1.7
	7.5′	291	1.4	1.4	7.5′	181	2.0	1.5	4.0	4.0′	133	2.8	1.5	6.2	4.0′	665	1.0	0.8	2.2
	10.0′	164	1.8	1.8	10.0′	100	2.6	2.1	6.0	5.0′	87	3.4	1.8	8.3	5.0′	422	1.3	1.0	2.7
	12.5′	105	2.4	2.4	12.5′	68	3.1	2.8	7.0	6.0′	61	4.1	2.1	9.8	6.0′	288	1.5	1.3	3.3
NARROW FLOOD	D	FC	L	W	D	FC	L	W	CB	D	FC	L	W	CB	D	FC	L	W	CB
	5.0′	243	1.5	1.5	5.0′	148	2.2	1.7	3.0	3.0′	96	3.2	1.8	4.7	3.0′	432	1.2	1.1	1.7
	7.5′	108	2.3	2.3	7.5′	70	3.1	2.7	4.0	4.0′	54	4.3	2.3	6.3	4.0′	247	1.6	1.4	2.3
	10.0′	61	3.1	3.1	10.0′	37	4.3	3.6	5.0	5.0′	35	5.3	2.9	7.7	5.0′	158	2.0	1.8	2.8
	12.5′	39	3.7	3.7	12.5′	25	5.0	4.4	7.0	6.0′	24	6.4	3.5	9.2	6.0′	109	2.4	2.1	3.3
FLOOD	D	FC	L	W	D	FC	L	W	CB	D	FC	L	W	CB	D	FC	L	W	CB
	5.0′	155	2.5	2.5	5.0′	102	3.1	2.8	2.0	3.0′	84	3.3	2.4	3.7	3.0′	289	1.9	1.7	1.3
	7.5′	69	3.7	3.7	7.5′	47	4.6	4.2	4.0	4.0′	48	4.3	3.1	4.8	4.0′	165	2.4	2.2	1.8
	10.0′	39	5.0	5.0	10.0′	27	6.0	5.5	5.0	5.0′	30	5.5	3.9	5.7	5.0′	106	3.0	2.8	2.3
	12.5′	25	6.2	6.2	12.5′	17	7.5	6.5	6.0	6.0′	21	6.8	4.9	7.2	6.0′	74	3.6	3.3	2.8